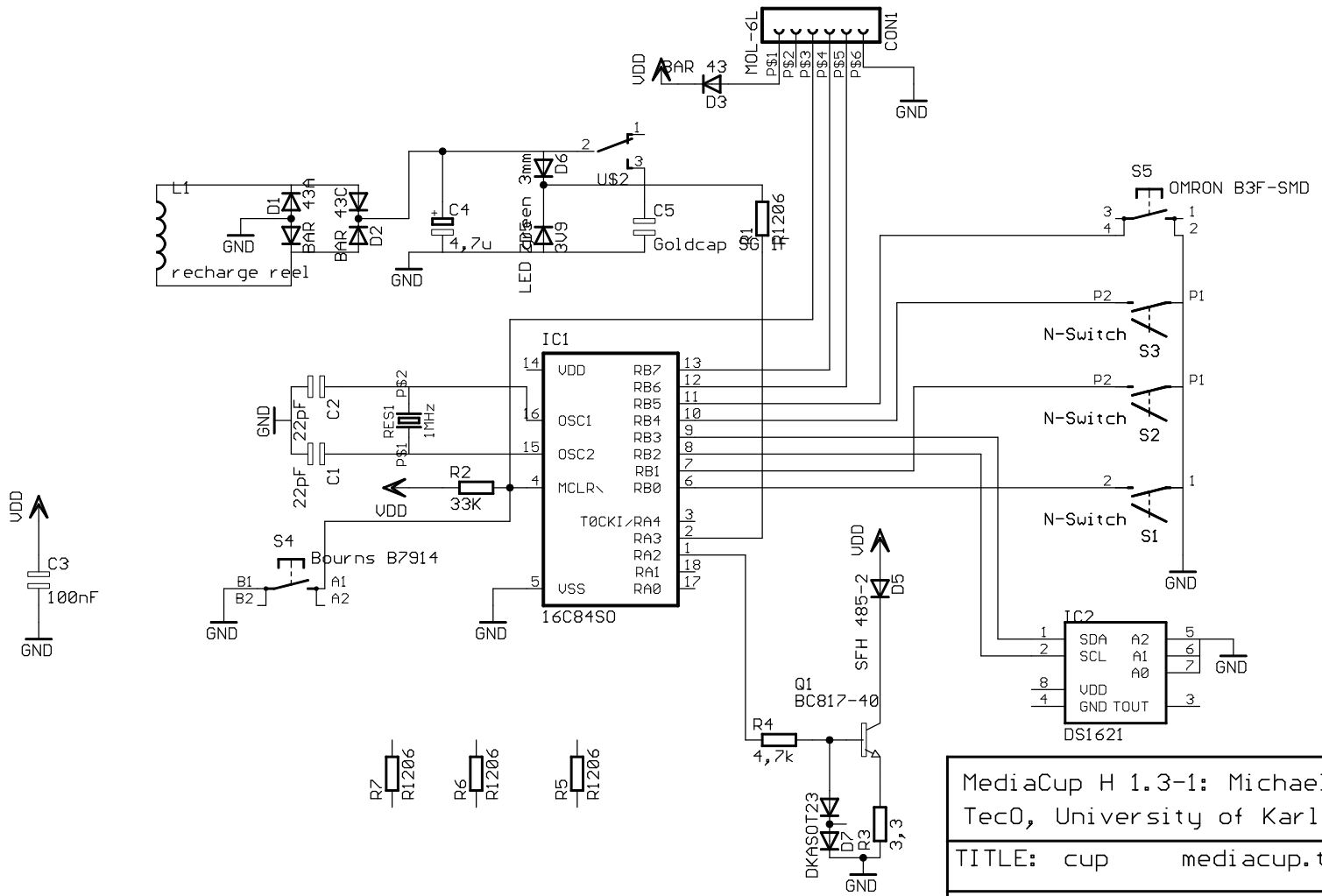

MediaCup H 1.3-1: Michael Beigl, Holger Krull
TecO, University of Karlsruhe

TITLE: cup mediacup.teco.edu

Document Number: REV:

Date: 12/13/2000 10:10:42p Sheet: 1/1